BUCHANAN AVE.

SANITARY SEWER REHABILITATION
(PROJECT NO. 2014023)
MSD OF BUNCOMBE COUNTY

INDEX OF DRAWINGS

SHEET NO.	DESCRIPTION
C-1	INDEX OF DRAWINGS AND VICINITY MAP
PL-1	OVERALL SANITARY SEWER & ASPHALT REPAIR PLAN
PL-2	SANITARY SEWER PLAN & PROFILE LINES "A" & "B"
PL-3	SANITARY SEWER PLAN & PROFILE LINE "C"
PL-4	SANITARY SEWER PLAN & PROFILE LINE "C"
PL-5	SANITARY SEWER PLAN & PROFILE LINE "D"
D-1	SANITARY SEWER DETAILS

NC ONE CALL
(TOLL FREE)
North Carolina 811
www.nc811.org
DIAL 811 BEFORE YOU DIG!
(or 1-800-632-4949)
IT'S THE LAW

LEGEND

- FFE = FINISHED FLOOR ELEV.
- CP = CALCULATED POINT
- PK FIND = PK NAIL FOUND
- EIP = EXISTING IRON PIN FOUND
- REBAR FOUND
- SIGN
- GAS METER
- TELEPHONE PEDESTAL
- TRAVERSE
- SHRUB
- TREE
- PROPOSED ABANDON PLUG
- PROPOSED MANHOLE NUMBER
- PROPOSED ABANDON SEWER MANHOLE
- CO = PROPOSED CLEANOUT
- EXISTING SANITARY SEWER MANHOLE
- EXISTING CLEANOUT
- WV = WATER VALVE
- FH = FIRE HYDRANT
- WM = WATER METER
- UTILITY POLE
- GUY WIRE
- ELECTRICAL JUNCTION BOX
- ELECTRIC MANHOLE
- LIGHT POLE
- CURB INLET
- STORM MANHOLE
- CATCH BASIN

GENERAL NOTES:

1. ALL WORK ON THIS PROJECT SHALL COMPLY WITH THE CURRENT STANDARD DETAILS AND SPECIFICATIONS OF THE METROPOLITAN SEWERAGE DISTRICT OF BUNCOMBE COUNTY. SPECIAL CONDITIONS AND SPECIAL PROVISIONS MAY APPLY TO THIS PROJECT - SEE SPECIFICATIONS.
2. ALL WORK SHALL COMPLY WITH FEDERAL, STATE, AND LOCAL LAWS AND REGULATIONS, AS MAY BE APPLICABLE TO THIS PROJECT AND THE WORK DONE HEREUNDER.
3. WHERE FEDERAL, STATE, OR LOCAL LAWS REQUIRE THAT A PERMIT BE ISSUED AND OBTAINED FOR WORK DONE UNDER THIS PROJECT, ALL WORK PERFORMED BY THE CONTRACTOR SHALL BE PERFORMED IN STRICT COMPLIANCE WITH THE TERMS AND CONDITIONS SET FORTH IN THE PERMIT.
4. ANY MODIFICATIONS TO THESE CONSTRUCTION PLANS OR SPECIFICATIONS SHALL BE APPROVED BY THE MSD PROJECT ENGINEER.
5. THE CONTRACTOR SHALL VERIFY THE LOCATION OF ALL UNDERGROUND UTILITIES PRIOR TO THE START OF CONSTRUCTION.
6. THE CONTRACTOR SHALL TAKE ALL NECESSARY STEPS TO KEEP THE SEWER AND ALL OTHER UTILITIES IN SERVICE AT ALL TIMES DURING CONSTRUCTION. THE CONTRACTOR SHALL ASSUME ALL RESPONSIBILITY FOR REPAIRS OF ANY KIND FOR DAMAGES RESULTING FROM THE CONTRACTOR'S CONSTRUCTION ACTIVITIES.
7. THE CONTRACTOR SHALL LOCATE ALL SERVICES CURRENTLY SERVED BY THE EXISTING SEWER AND RECONNECT TO THE NEW SEWER, INSTALLING A CLEANOUT ASSEMBLY AS REQUIRED (SEE DETAIL).
8. THE CONTRACTOR SHALL RESTORE ALL STREETS, PROPERTIES, AND IMPROVEMENTS TO AS GOOD OR BETTER CONDITION THAN EXISTED PRIOR TO CONSTRUCTION.
9. PROPERTY LINES SHOWN ON PLANS ARE APPROXIMATE ONLY. PROPERTY MONUMENTS DISTURBED DURING CONSTRUCTION SHALL BE RESET BY A LICENSED NC PROFESSIONAL LAND SURVEYOR.
10. DESIGN BASED ON SURVEY INFORMATION PROVIDED BY BANKSCREEK SURVEYING @ 828-779-4039.

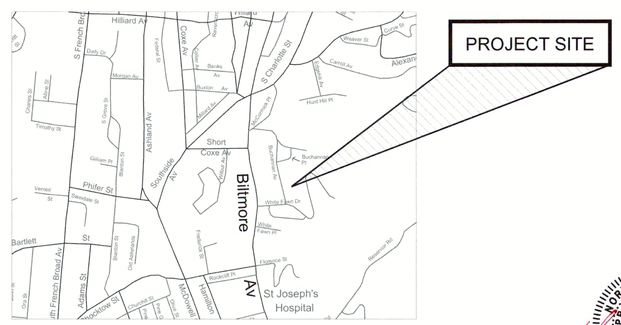

VICINITY MAP
Scale: NTS

NORTH CAROLINA PROFESSIONAL SEAL 37824 ENGINEER WILLIAM K. ARMISTEAD
11/22/22

- PROPOSED SANITARY SEWER LINE
- EXISTING SANITARY SEWER LINE
- EXISTING PERMANENT EASEMENT
- PROPOSED PERMANENT EASEMENT
- PROPOSED TEMPORARY EASEMENT
- PROPOSED ASPHALT SURFACE REPAIR
- PROPERTY LINE
- RIGHT OF WAY LINE
- EXISTING WATER LINE
- EXISTING 24" WATER LINE
- EXISTING GAS LINE
- EXISTING OVER HEAD UTILITY LINE
- EXISTING UNDERGROUND UTILITY
- EXISTING TELEPHONE LINE
- EXISTING STORM DRAINAGE PIPE
- EXISTING FENCE LINE
- DITCH LINE
- TOE/TOP OF SLOPE
- CONCRETE
- GRAVEL AREA (RIP-RAP)
- ASPHALT ROADWAY
- ASPHALT DRIVE / PARKING LOT
- EXISTING BUILDINGS
- EXISTING MAJOR CONTOUR
- EXISTING MINOR CONTOUR

BUCHANAN AVE
PROJECT NO. 2014023

P:\COLLECTION_SYSTEM\SYS_REHAB\GENERAL SEWER REHAB\DESIGN\Buchanan Ave - 2014023\DWG\PLAN\BUCHANAN AVE REV 4-15-20.dwg 11/28/2022 3:12 PM JOELE

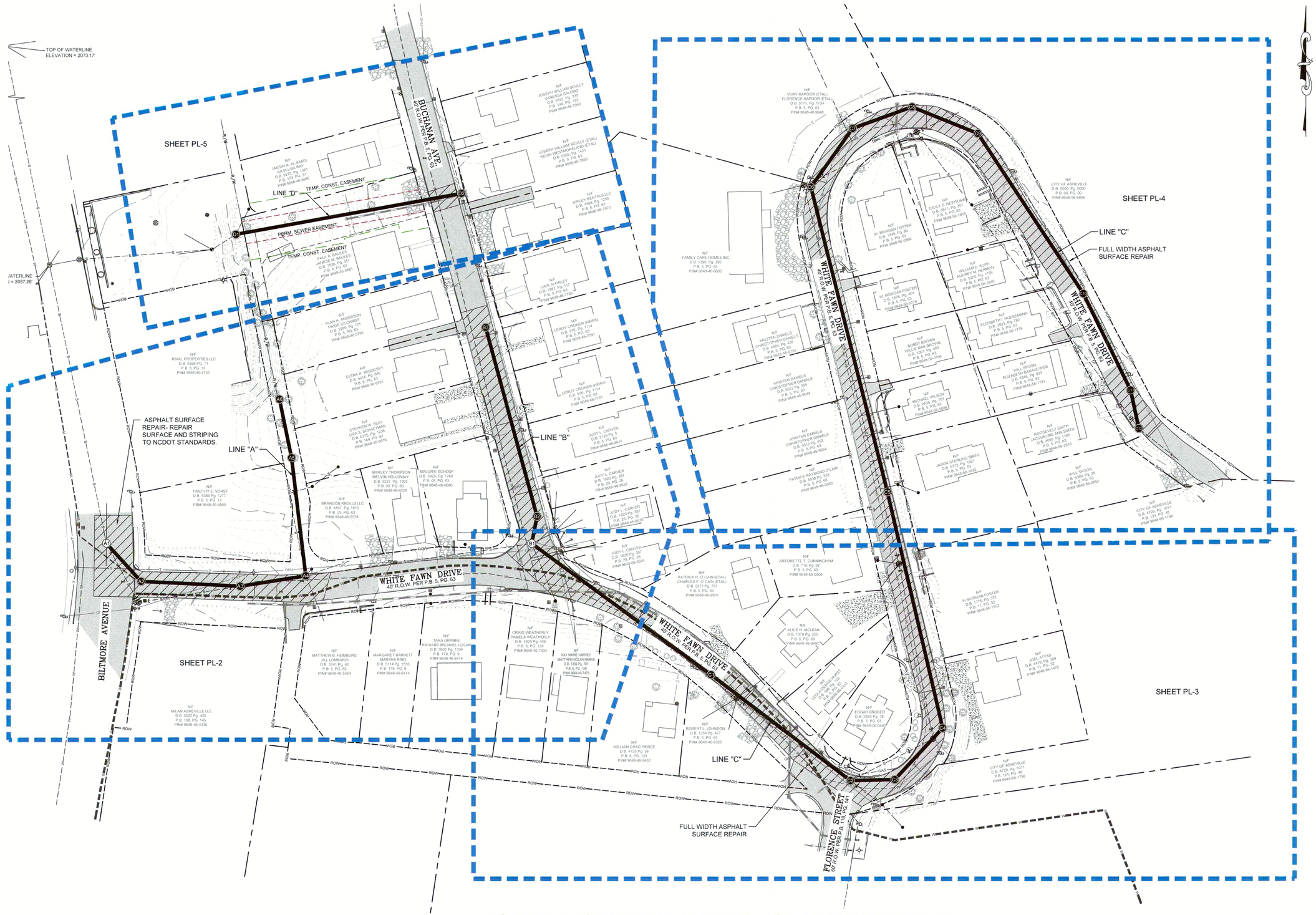

OVERALL SANITARY SEWER & ASPHALT REPAIR PLAN

SCALE: 1"=40'

Metropolitan Sewerage District of Buncombe County

BUCHANAN AVE.
Overall Sanitary Sewer & Asphalt Repair Plan

PL-1

DRAWN: JDO
CHECKED BY: KMA
APPROVED: SKA
DATE: 06/27/2018
SCALE: 1" = 40'

SEAL 21624 NORTH CAROLINA PROFESSIONAL ENGINEER
11/22/21

No.	DESCRIPTION	DATE
	REVISIONS	

MSD

Engineering Division

METROPOLITAN SEWERAGE DISTRICT • BUNCOMBE COUNTY, NORTH CAROLINA

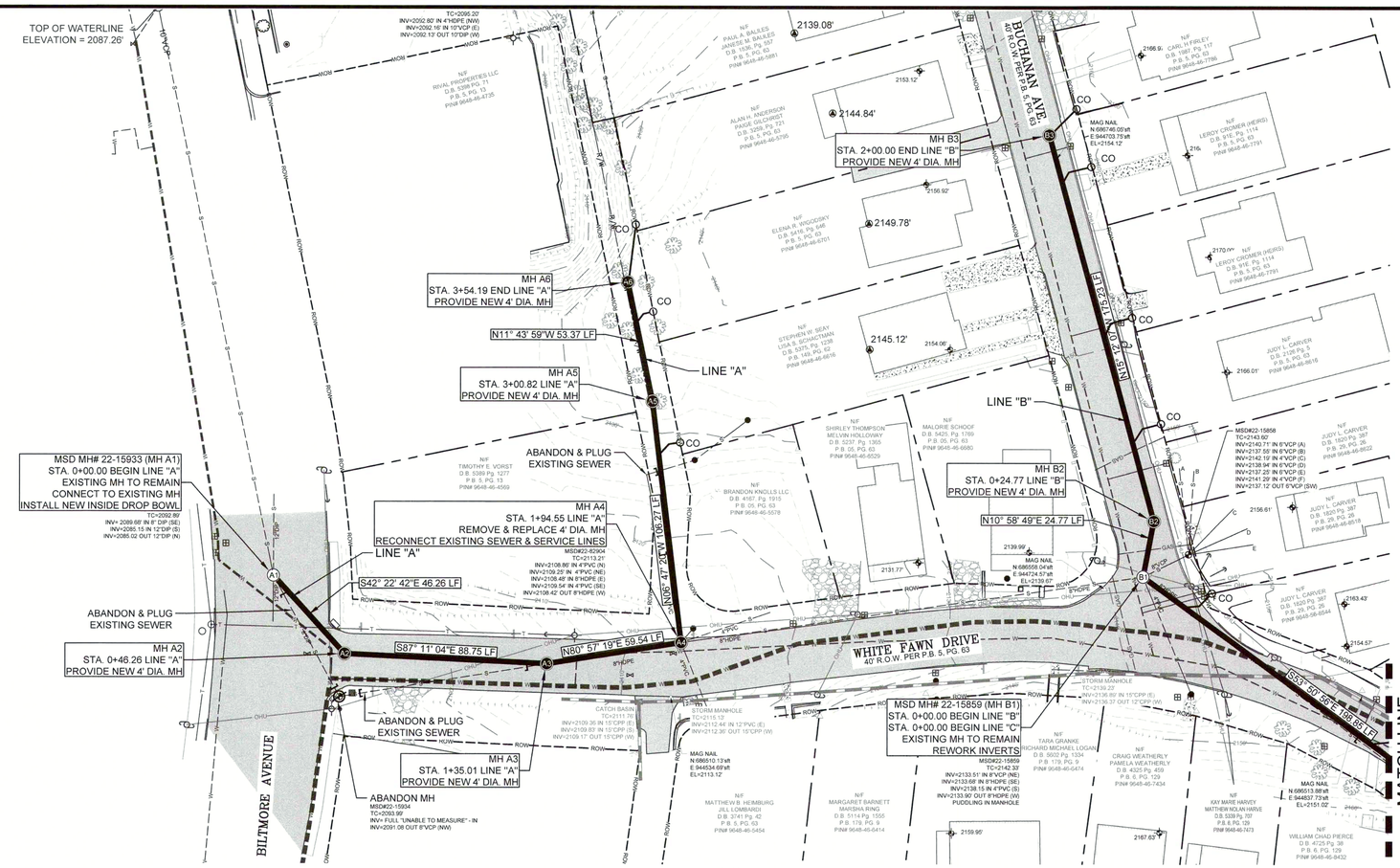

SANITARY SEWER PLAN LINES "A" & "B"

SCALE: 1"=30'

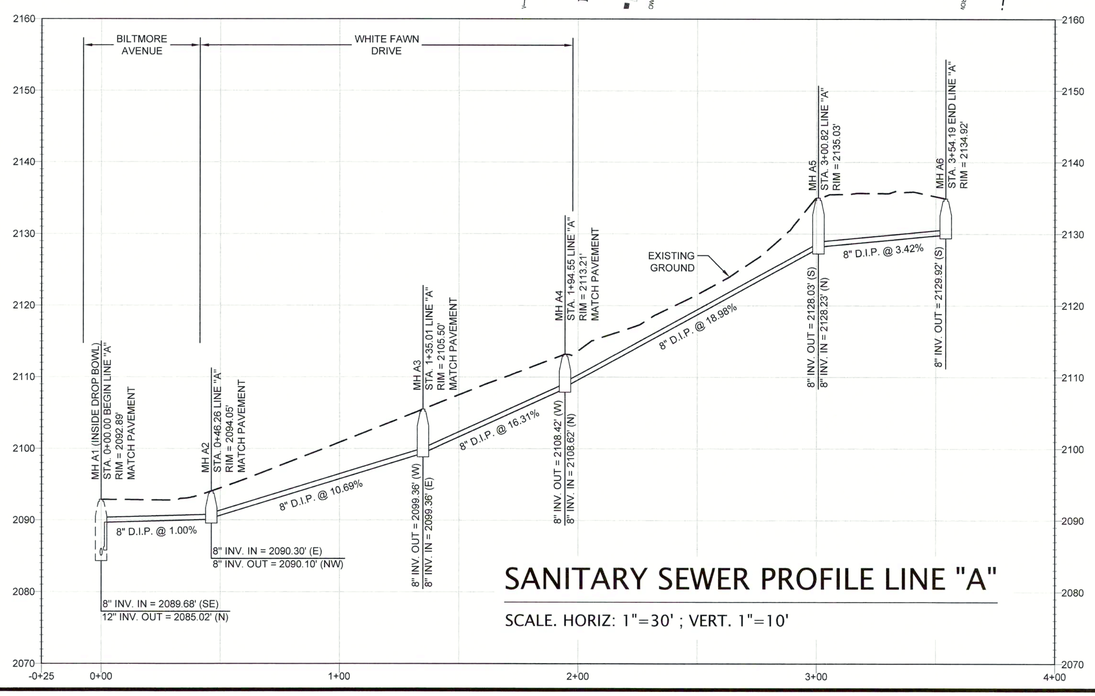

SANITARY SEWER PROFILE LINE "A"

SCALE. HORIZ: 1"=30' ; VERT. 1"=10'

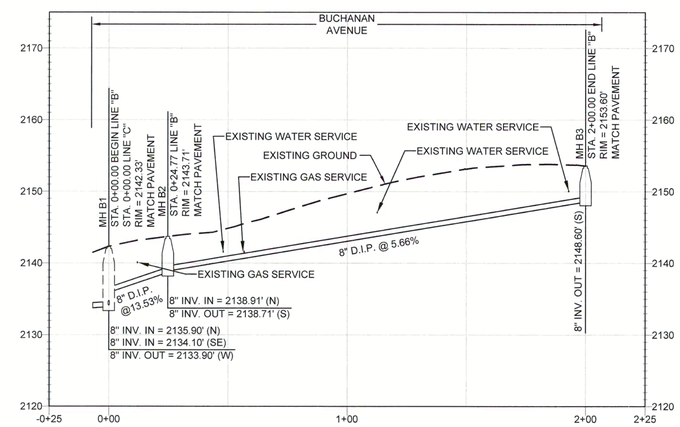

SANITARY SEWER PROFILE LINE "B"

SCALE. HORIZ: 1"=30' ; VERT. 1"=10'

NOTE:
1. THE SEWER LINE SEGMENT BETWEEN MH A4 & MH B1 WAS REPLACED BY MSD (REF. W/O 247996).

GRAPHIC SCALE 1 INCH = 30 FEET

N.C. GRID NORTH
NAD83(2012B) NAVD88

Metropolitan Sewerage District of Buncombe County

BUCHANAN AVE.
Sanitary Sewer Plan & Profile
Lines "A" & "B"

PL-2

DRAWN: JDO
CHECKED BY: KMA
APPROVED: SKA
DATE: 06/27/2018
SCALE: 1" = 30'

NORTH CAROLINA PROFESSIONAL SEAL 37824 ENGINEER SHAWN K. KINNEY
11/22/21

No.	DESCRIPTION	DATE
	REVISIONS	

MSD

Engineering Division

METROPOLITAN SEWERAGE DISTRICT • BUNCOMBE COUNTY, NORTH CAROLINA

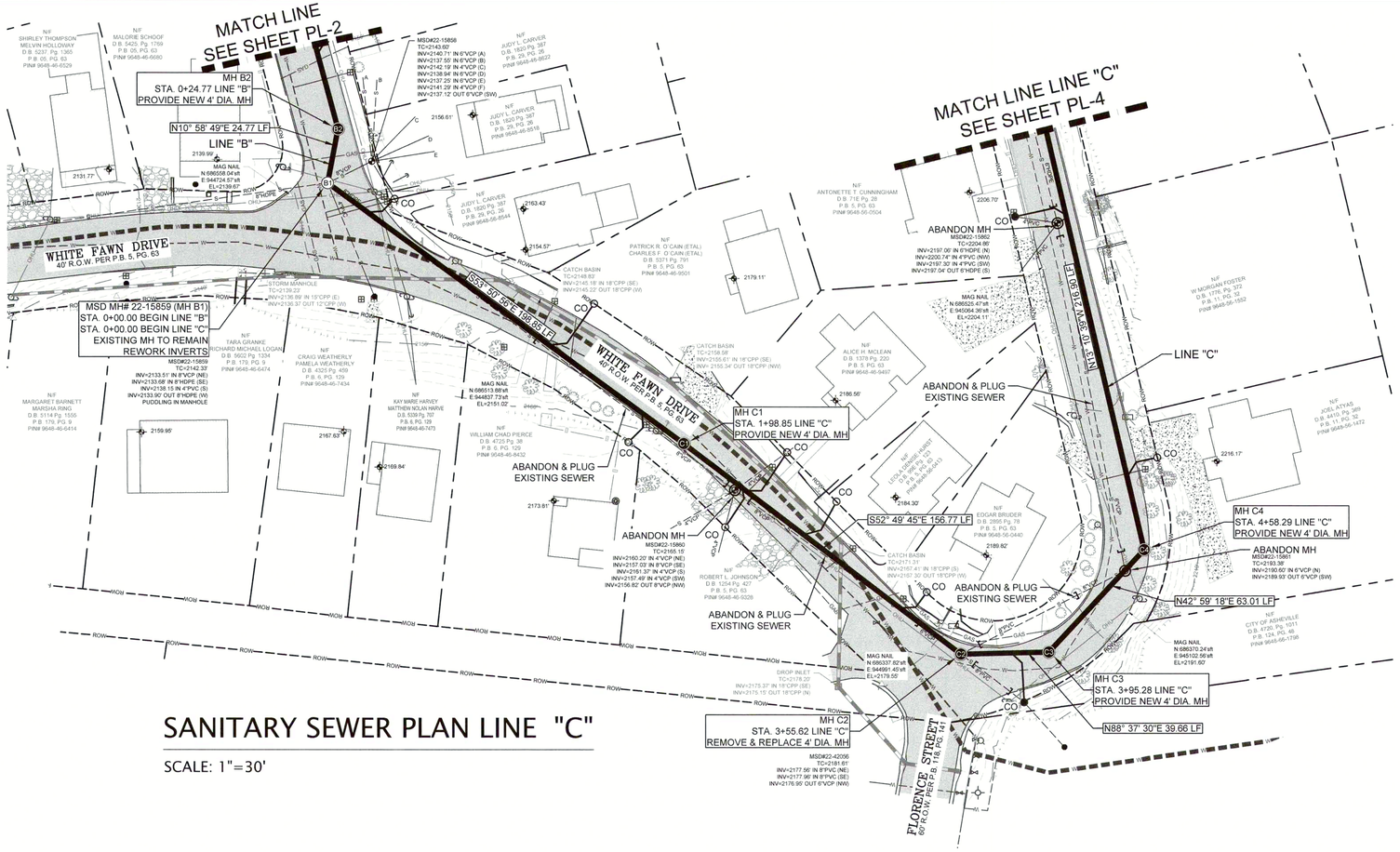

SANITARY SEWER PLAN LINE "C"

SCALE: 1"=30'

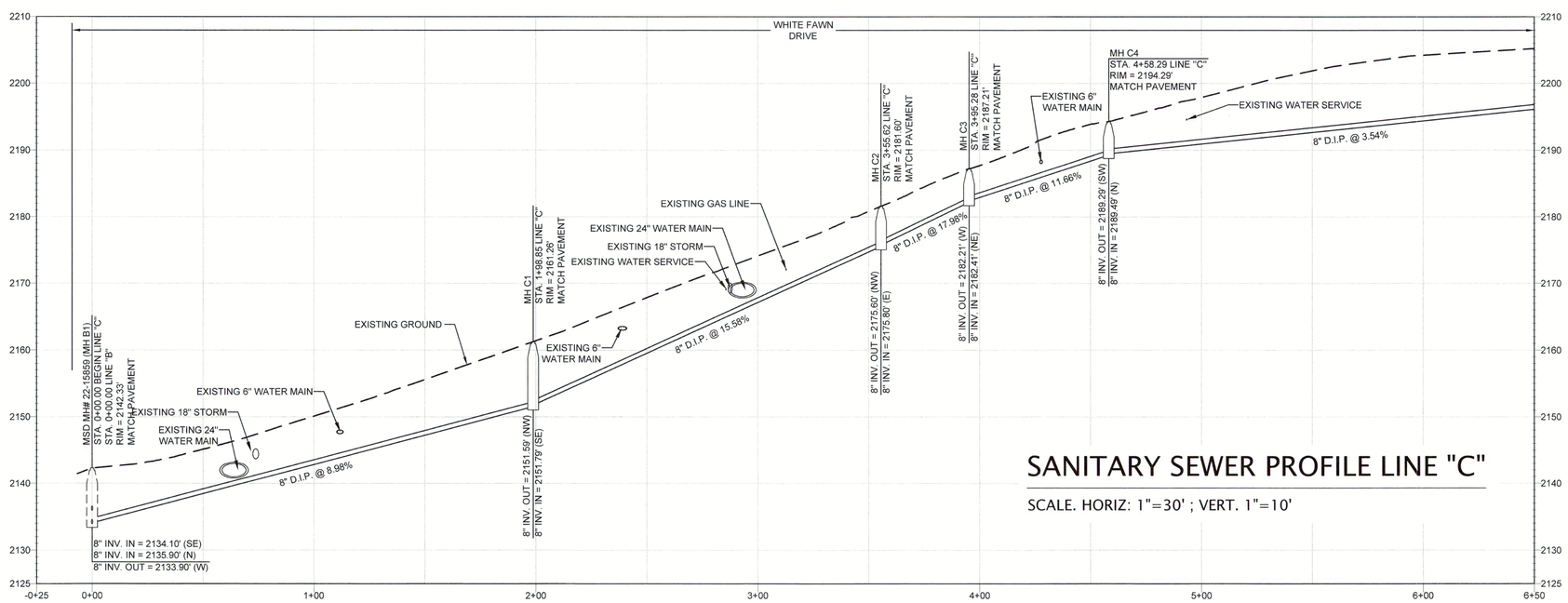

SANITARY SEWER PROFILE LINE "C"

SCALE. HORIZ: 1"=30' ; VERT. 1"=10'

GRAPHIC SCALE 50 0 25 50 100 150 — 1 INCH = 50 FEET

N.C. GRID NORTH
NAD83(2012B) NAVD88

Metropolitan Sewerage District of Buncombe County

BUCHANAN AVE.
Sanitary Sewer Plan & Profile
Line "C"

PL-3

DRAWN: JDO
CHECKED BY: KMA
APPROVED: SKA
DATE: 06/27/2018
SCALE: 1" = 30'

SEAL 37364 PROFESSIONAL ENGINEER SHAWN K. KONG NORTH CAROLINA
11/22/22

No.	DESCRIPTION	DATE
	REVISIONS	

MSD

Engineering Division

METROPOLITAN SEWERAGE DISTRICT • BUNCOMBE COUNTY, NORTH CAROLINA

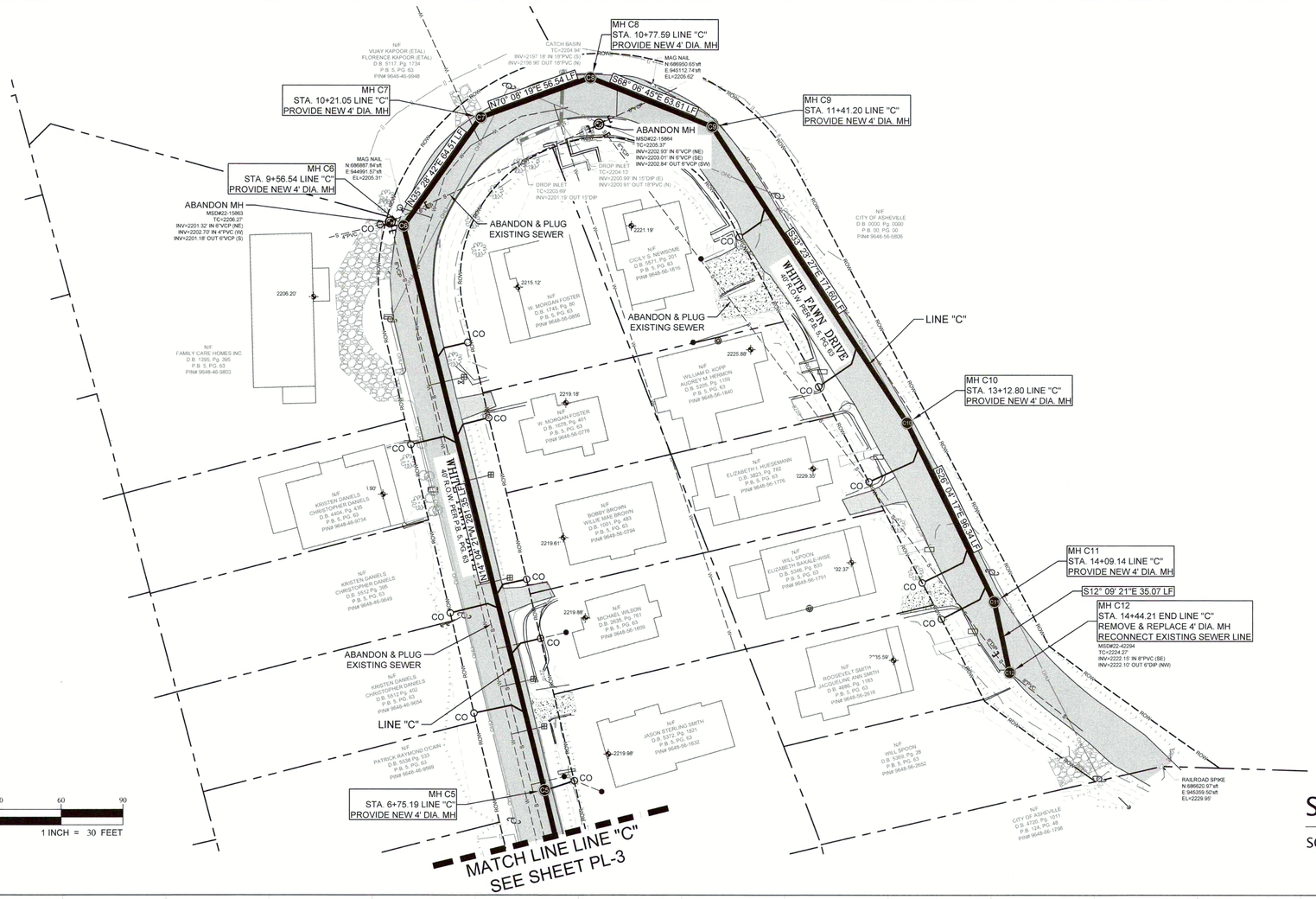

SANITARY SEWER PLAN LINE "C"

SCALE: 1"=30'

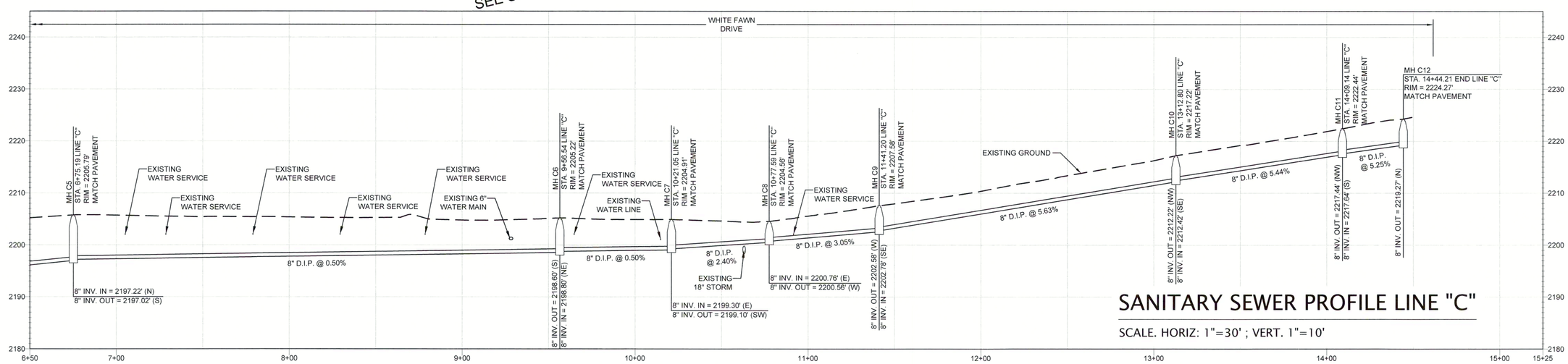

SANITARY SEWER PROFILE LINE "C"

SCALE. HORIZ: 1"=30' ; VERT. 1"=10'

N.C. GRID NORTH
NAD83(2012B) NAVD88

Metropolitan Sewerage District of Buncombe County

BUCHANAN AVE.
Sanitary Sewer Plan & Profile
Line "C"

PL-4

DRAWN: JDO
CHECKED BY: KMA
APPROVED: SKA
DATE: 06/27/2018
SCALE: 1" = 30'

NORTH CAROLINA PROFESSIONAL SEAL 37604 ENGINEER SHAUN K. AMIN
11/22/22

No.	DESCRIPTION	DATE
	REVISIONS	

MSD

Engineering Division

METROPOLITAN SEWERAGE DISTRICT • BUNCOMBE COUNTY, NORTH CAROLINA

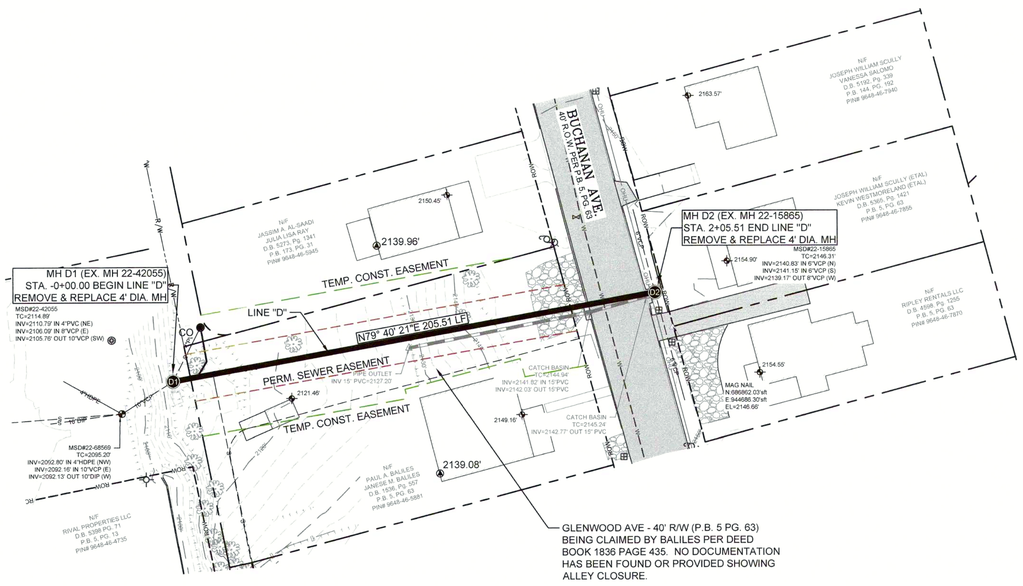

SANITARY SEWER PLAN LINE "D"

SCALE: 1"=30'

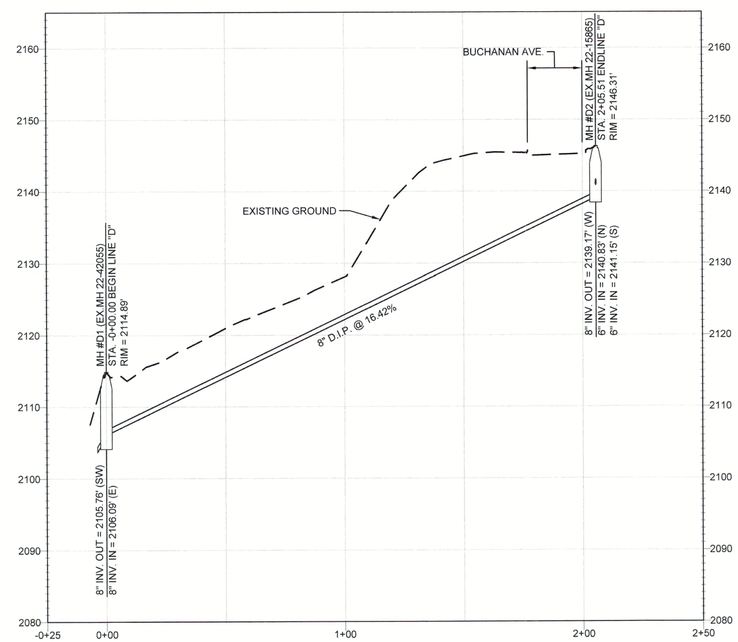

SANITARY SEWER PROFILE LINE "D"

SCALE. HORIZ: 1"=30' ; VERT. 1"=10'

N.C. GRID NORTH
NAD83(2012B) NAVD88

Metropolitan Sewerage District of Buncombe County

BUCHANAN AVE.
Sanitary Sewer Plan & Profile
Line "D"

PL-5

DRAWN: JDO
CHECKED BY: KMA
APPROVED: SKA
DATE: 06/27/2018
SCALE: 1" = 30'

NORTH CAROLINA PROFESSIONAL SEAL 27624 ENGINEER SHAUN K. ALLEN
11/22/22

No	DESCRIPTION	DATE
1	NOTE ADDED REGARDING GLENWOOD AVE. R/W	11-22-22

REVISIONS

MSD

Engineering Division

METROPOLITAN SEWERAGE DISTRICT • BUNCOMBE COUNTY, NORTH CAROLINA

GRAPHIC SCALE 30 0 15 30 60 90
1 INCH = 30 FEET

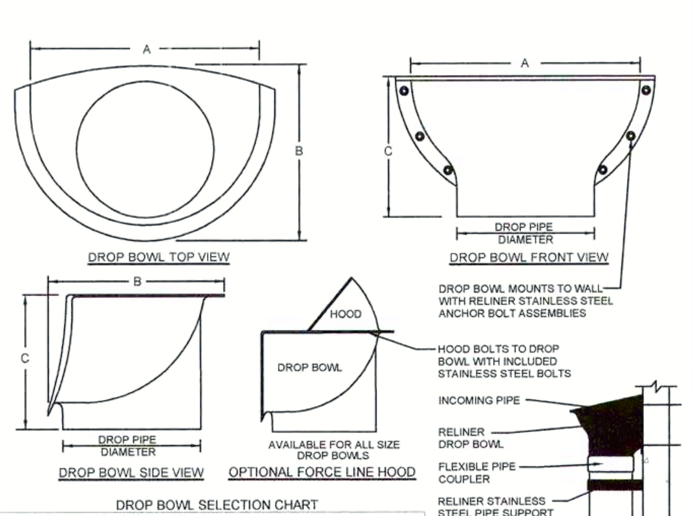

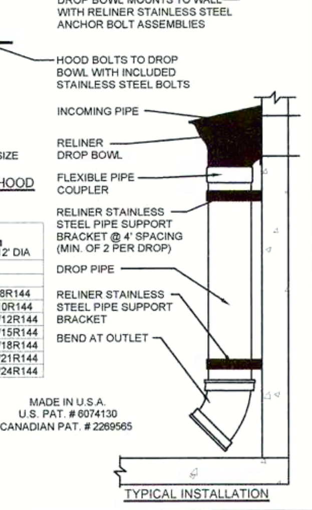

DROP BOWL SELECTION CHART

DROP PIPE DIAMETER	FLAT WALL	4' DIA	5' DIA	6' DIA	7-8' DIA	9-12' DIA
		MANHOLE DIAMETER				
4"	A4FDB	A4DB	A4DB	A4R96	A4R96	
6"	A6FDB	A6DB	A6DB	A6R96	A6R96	
8"	B8FDB	B8DB	B8DB	B8DBR84	B8DBR84	B8R144
10"	B10FDB	B10DB	B10DB	B10R96	B10R96	B10R144
12"	24/12FDB	24/12R60	24/12R60	24/12R60	24/12R96	24/12R144
15"	24/15FDB	24/15R60	24/15R60	24/15R60	24/15R96	24/15R144
18"	30/18FDB		30/18R60	30/18R60	30/18R96	30/18R144
21"	36/21FDB		36/21R60			36/21R144
24"	48/24FDB			48/24R72	48/24R96	48/24R144

DROP BOWL DIMENSIONS

SERIES	DROP PIPE DIAMETER	WIDTH "A"	DEPTH "B"	HEIGHT "C"	ANCHOR BOLT QUANTITY & TYPE
A4	4"	12"	9.5"	8.9"	4 - 1" TAMP-IN
A6	6"	12"	11.1"	8.8"	4 - 1" TAMP-IN
B8	8"	18"	13.0"	11.5"	4 - 1" TAMP-IN
B10	10"	18"	13.5"	11.5"	4 - 1" TAMP-IN
24/12	12"	24"	16.5"	15.0"	6 - 1" TAMP-IN
24/15	15"	24"	19.3"	15.8"	6 - 1" TAMP-IN
30/18	18"	30"	23.5"	18.5"	6 - 1" TAMP-IN
36/21	21"	36"	31.6"	23.0"	8 - 3" WEDGE
48/24	24"	48"	30.5"	30.0"	10 - 3" WEDGE

MADE IN U.S.A.
U.S. PAT. # 6074130
CANADIAN PAT. # 2269565

RELINER INSIDE DROP BOWLS ARE FABRICATED IN MARINE GRADE FIBERGLASS AND FINISHED IN BRIGHT WHITE GEL COAT.

USE RELINER STAINLESS STEEL PIPE BRACKETS TO SUPPORT DROP PIPE. EXTERNAL PIPE COUPLER REQUIRED. PROVIDE SWEEP AT DROP PIPE OUTLET.

RELINER / DURAN, INC.
9 MATTHEWS DRIVE, UNIT A1/A2
EAST HADDAM, CT 06423
(800) 508-6001 FAX: (877)434-3197
WWW.RELINER.COM

DESCRIPTION	DATE	SCALE
SANITARY MANHOLE INSIDE DROP BOWL	2/22/21	NONE
	DRAWING NUMBER	DB-1

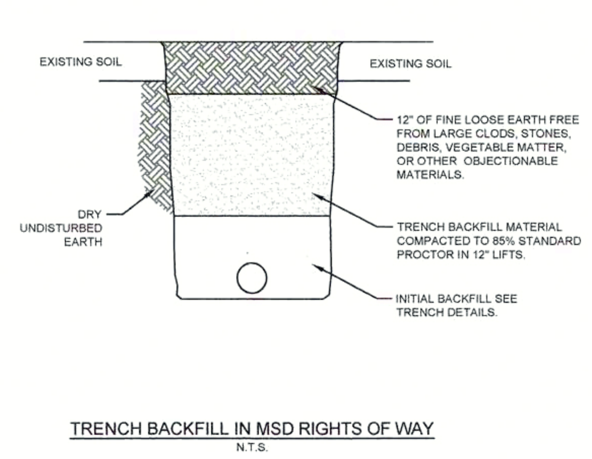

TRENCH BACKFILL IN MSD RIGHTS OF WAY
N.T.S.

STANDARD DETAIL
Metropolitan Sewerage District
of Buncombe County, North Carolina
TRENCH BACKFILL
DATE APPROVED: MARCH 2017 | 1.16 - 01

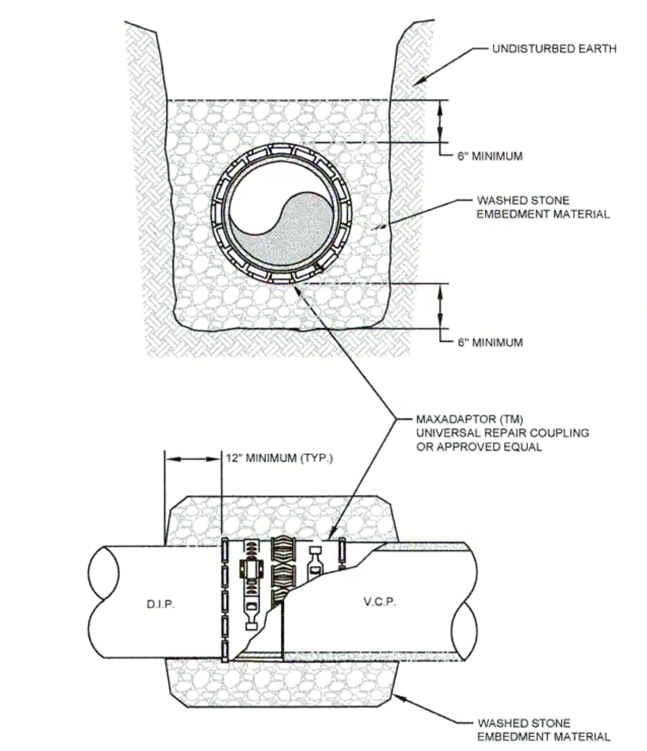

NOTES:

1. ONLY ONE TRANSITION IN PIPE MATERIALS ALLOWED BETWEEN ANY TWO MANHOLES.
2. FOR PVC TO D.I.P., AND D.I.P. TO D.I.P. CONNECTIONS, LONG BODY D.I.M.J. SLEEVES SHALL BE USED.

STANDARD DETAIL
Metropolitan Sewerage District
of Buncombe County, North Carolina
FLEXIBLE PIPE COUPLING FOR CONNECTIONS TO VCP ONLY
DATE APPROVED: OCTOBER 2019 | 2.01 - 03

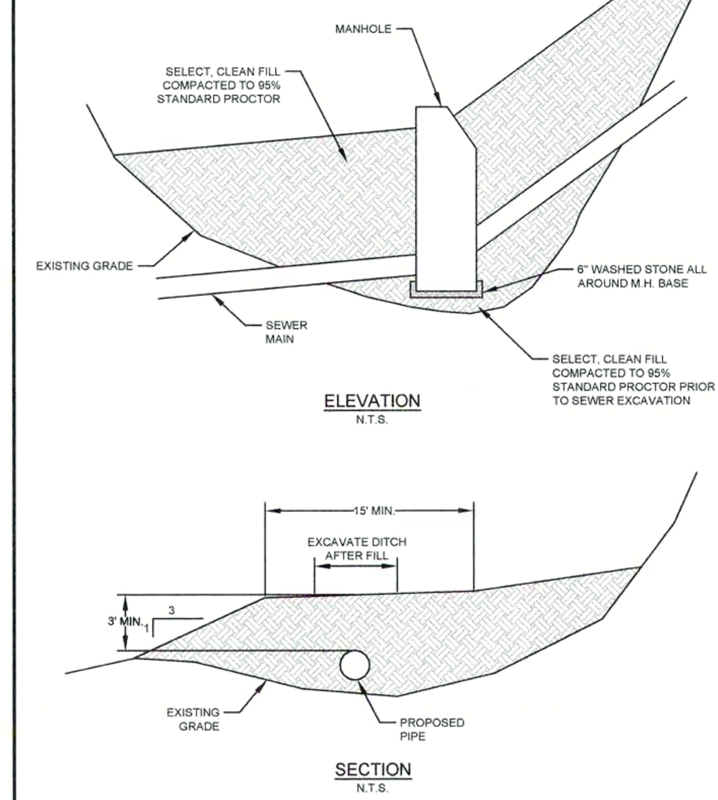

STANDARD DETAIL
Metropolitan Sewerage District
of Buncombe County, North Carolina
SEWER MAIN FILL
DATE APPROVED: MARCH 2017 | 2.01 - 04

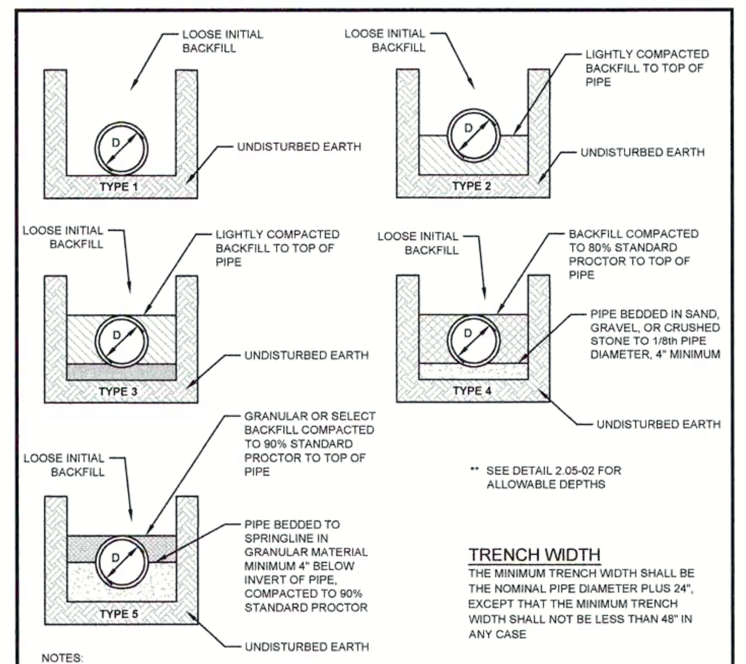

** SEE DETAIL 2.05-02 FOR ALLOWABLE DEPTHS

TRENCH WIDTH
THE MINIMUM TRENCH WIDTH SHALL BE THE NOMINAL PIPE DIAMETER PLUS 24", EXCEPT THAT THE MINIMUM TRENCH WIDTH SHALL NOT BE LESS THAN 48" IN ANY CASE

NOTES:

1. MINIMUM ALLOWABLE DEPTH OF COVER IS 3 FT.
2. IN ROCK OR WET SOIL, PIPE MUST BE BEDDED IN AT LEAST 6" OF CRUSHED STONED EMBEDMENT MATERIAL BELOW THE INVERT OF THE PIPE.
3. GRANULAR MATERIALS ARE DEFINED PER THE AASHTO SOIL CLASSIFICATION SYSTEM (ASTMD3282) OR THE UNIFIED SOIL CLASSIFICATION SYSTEM (ASTM D2487), WITH THE EXCEPTION THAT GRAVEL BEDDING/BACKFILL ADJACENT TO THE PIPE IS LIMITED TO 2" MAXIMUM PARTICLE SIZE PER ANSI/AWWA C600
4. THESE PIPES ARE ADEQUATE FOR DEPTHS OF COVER FROM 3 FT. UP TO THE MAXIMUM SHOWN INCLUDING AN ALLOWANCE FOR A SINGLE H-20 TRUCK WITH A 1.5 IMPACT FACTOR UNLESS NOTED.
5. RING DEFLECTION LIMITED TO 3%, MINIMUM SAFETY FACTOR OF 2. EARTH LOAD BASED ON SOIL WEIGHT OF 120 PCF.

STANDARD DETAIL
Metropolitan Sewerage District
of Buncombe County, North Carolina
TYPICAL TRENCH DETAIL FOR DUCTILE IRON PIPE - 1
DATE APPROVED: MARCH 2017 | 2.05 - 01

Maximum Depth of Cover for Ductile Iron Pipe w/ Cement Lining

Pipe Size	Class	Type 1	Type 2	Type 3	Type 4	Type 5
4	350	53	61	69	85	100
6	350	26	31	37	47	65
8	350	16	20	25	34	50
10	350	11	15	19	28	45
12	350	10	15	19	28	44
14	250	-	11	15	23	36
14	300	-	13	17	26	42
14	350	-	14	19	27	44
16	250	-	11	15	24	34
16	300	-	13	17	26	39
16	350	-	15	20	28	44
18	250	-	10	14	22	31
18	300	-	13	17	26	36
18	350	-	15	19	28	41
20	250	-	10	14	22	30
20	300	-	13	17	26	35
20	350	-	15	19	28	38
24	200	-	8	12	17	25
24	250	-	11	15	20	29
24	300	-	13	17	24	32
24	350	-	15	19	28	37
30	200	-	8	12	16	24
24	250	-	11	15	19	27
30	300	-	12	16	21	29
30	350	-	15	19	25	33
36	200	-	8	12	15	23
36	250	-	10	14	18	25
36	300	-	12	16	20	28
36	350	-	15	19	24	32
42	200	-	8	12	15	22
42	250	-	10	14	17	25
42	300	-	12	16	20	27
42	350	-	15	19	23	32
48	200	-	8	11	15	22
48	250	-	10	13	17	24
48	300	-	12	15	19	27
48	350	-	15	18	22	30
54	200	-	8	11	14	22
54	250	-	10	13	16	24
54	300	-	13	15	19	27
54	350	-	15	18	22	30
60	200	-	8	11	14	22
60	250	-	10	13	16	24
60	300	-	13	15	19	26
60	350	-	15	18	22	30
64	200	-	8	11	14	21
64	250	-	10	13	16	24
64	300	-	12	15	19	26
64	350	-	15	17	21	29

SOURCE: Ductile Iron Pipe for Wastewater Applications, DIPRA 2006

STANDARD DETAIL
Metropolitan Sewerage District
of Buncombe County, North Carolina
TYPICAL TRENCH DETAIL FOR DUCTILE IRON PIPE - 2
DATE APPROVED: MARCH 2017 | 2.05 - 02

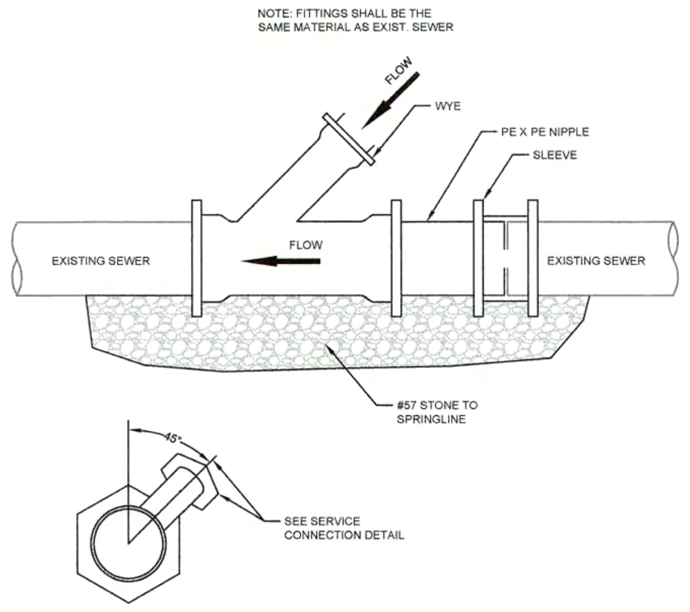

NOT FOR USE ON NEW CONSTRUCTION.

STANDARD DETAIL
Metropolitan Sewerage District
of Buncombe County, North Carolina
SERVICE CONNECTION TO EXISTING SEWER
DATE APPROVED: MARCH 2017 | 2.07 - 01

NOTES:

1. WYE CONNECTIONS ARE STANDARD FOR NEW SEWER MAIN CONSTRUCTION.
2. FORCE MAINS CARRYING DOMESTIC WASTEWATER FROM SANITARY CONVENIENCES WITHIN A SINGLE BUILDING, MAY BE CONNECTED TO A 4" MSD GRAVITY SERVICE LINE PROVIDED THAT GRAVITY FLOW WILL BE MAINTAINED DURING PROPOSED MAXIMUM DISCHARGE RATE FOR THE GRINDER OR EFFLUENT PUMP(S).
3. WHERE COVER IS LESS THAN 3 FT. DUCTILE IRON MUST BE USED.
4. WHERE DUCTILE IRON IS REQUIRED RISER MAY BE CONSTRUCTED WITH SCH. 40 PVC

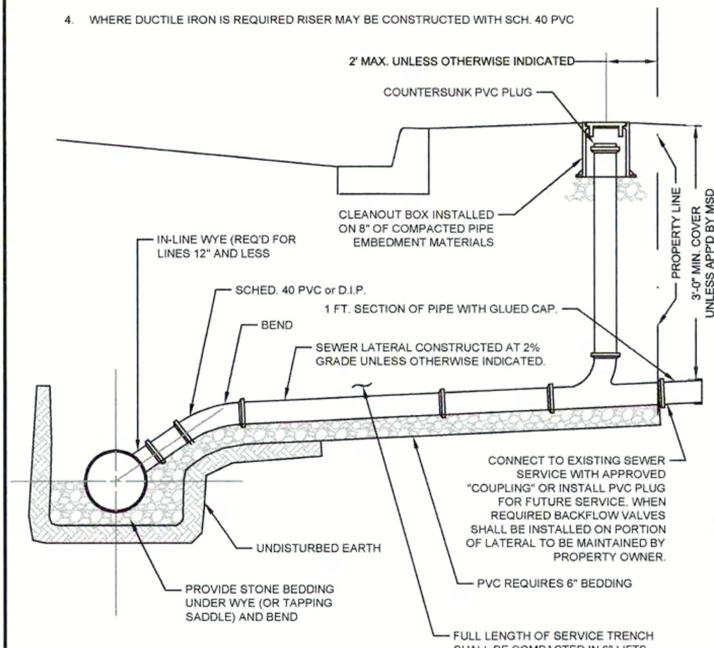

STANDARD DETAIL
Metropolitan Sewerage District
of Buncombe County, North Carolina
SANITARY SEWER SERVICE LESS THAN 5' DEEP
DATE APPROVED: MARCH 2017 | 2.07 - 03

NOTES:

1. WYE CONNECTIONS ARE STANDARD FOR NEW SEWER MAIN CONSTRUCTION.
2. FORCE MAINS CARRYING DOMESTIC WASTEWATER FROM SANITARY CONVENIENCES WITHIN A SINGLE BUILDING, MAY BE CONNECTED TO A 4" MSD GRAVITY SERVICE LINE PROVIDED THAT GRAVITY FLOW WILL BE MAINTAINED DURING PROPOSED MAXIMUM DISCHARGE RATE FOR THE GRINDER OR EFFLUENT PUMP(S).
3. WHERE COVER IS LESS THAN 3 FT. DUCTILE IRON MUST BE USED.
4. WHERE DUCTILE IRON IS REQUIRED RISER MAY BE CONSTRUCTED WITH SCH. 40 PVC

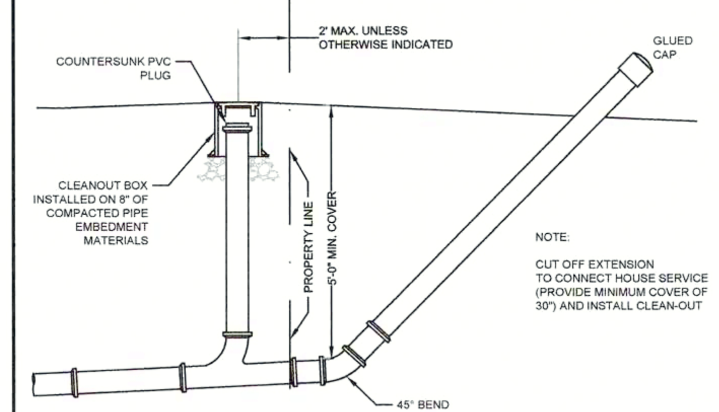

CONNECT TO EXISTING SEWER SERVICE WITH APPROVED COUPLING OR INSTALL PVC PLUG FOR FUTURE SERVICE. WHEN REQUIRED BACKFLOW VALVES SHALL BE INSTALLED ON PORTION OF LATERAL TO BE MAINTAINED BY PROPERTY OWNER.

SEE DETAIL 2.07-03 FOR ADDITIONAL NOTES

STANDARD DETAIL
Metropolitan Sewerage District
of Buncombe County, North Carolina
SANITARY SEWER SERVICE MORE THAN 5' DEEP
DATE APPROVED: MARCH 2017 | 2.07 - 04

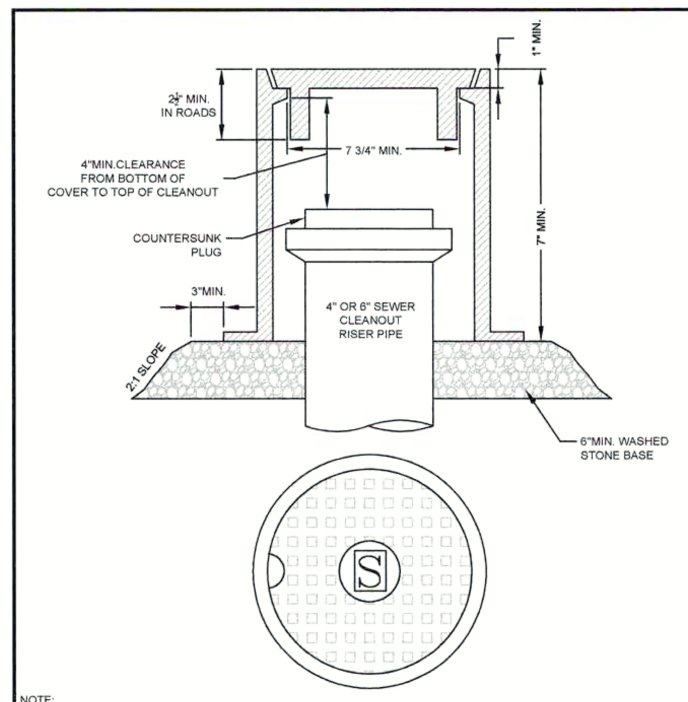

NOTE:

1. ALL SANITARY SEWER CLEANOUT BOXES AND COVERS SHALL BE MANUFACTURED FROM GRAY IRON (CAST IRON) MEETING THE REQUIREMENTS OF AWWA C110 AND ASTM A536.
2. ALL SANITARY SEWER CLEANOUT BOXES AND COVERS SHALL CONFORM TO PARAGRAPH 2.01(d) OF ITEM II, SECTION VI OF MSD's TECHNICAL SPECIFICATIONS (MADE IN THE U.S.A.)
3. NON-TRAFFIC LOCATIONS; SANITARY SEWER CLEANOUT BOXES AND COVERS SHALL BE AS MANUFACTURED BY EAST JORDAN IRON WORKS MODEL 1566 (OR APPROVED EQUAL)
4. TRAFFIC LOCATIONS; SANITARY SEWER CLEANOUT BOXES AND COVERS SHALL BE AS MANUFACTURED BY EAST JORDAN IRON WORKS MODEL 1574 (OR APPROVED EQUAL)

STANDARD DETAIL
Metropolitan Sewerage District
of Buncombe County, North Carolina
CLEANOUT BOX
DATE APPROVED: MARCH 28, 2019 | 2.07 - 05

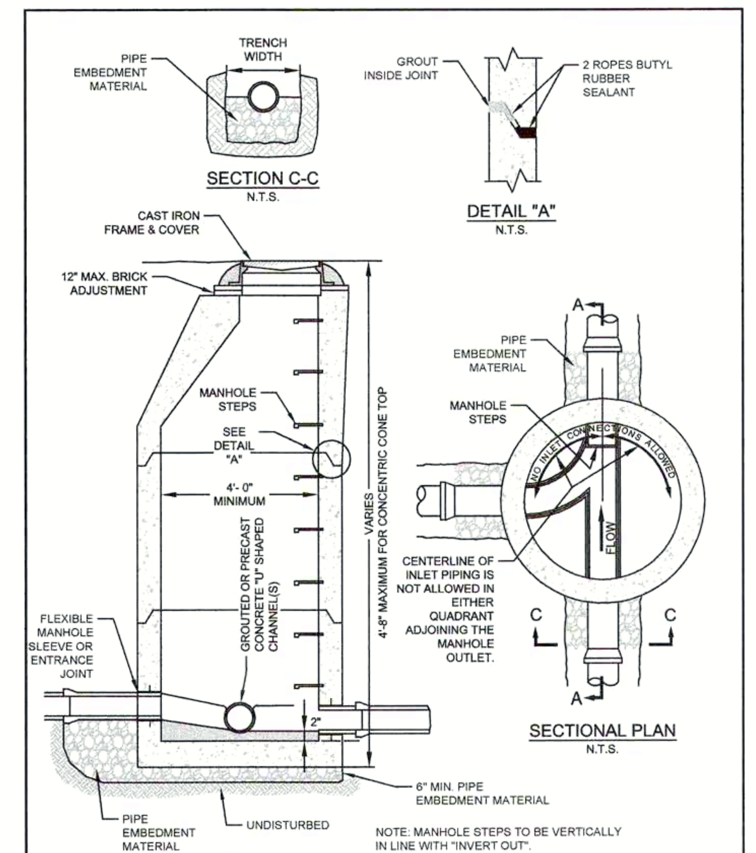

NOTE: MANHOLE STEPS TO BE VERTICALLY IN LINE WITH "INVERT OUT".

MANHOLE NOTES:

1. FOR MANHOLES LARGER THAN 4 FT. DIA., MAINTAIN FULL MANHOLE DIA. TO 6 FT. ABOVE INVERT BENCH.
2. FOR 5 FT. AND 6 FT. DIA. MANHOLES, USE A TRANSITION CONE TO REDUCE TO 4 FT. DIA. FOR 7 FT. TO 10 FT. DIA. MANHOLES, USE A TRANSITION TOP TO REDUCE TO 4 FT. DIA.

STANDARD DETAIL
Metropolitan Sewerage District
of Buncombe County, North Carolina
STANDARD MANHOLE
DATE APPROVED: MARCH 2017 | 2.11 - 01

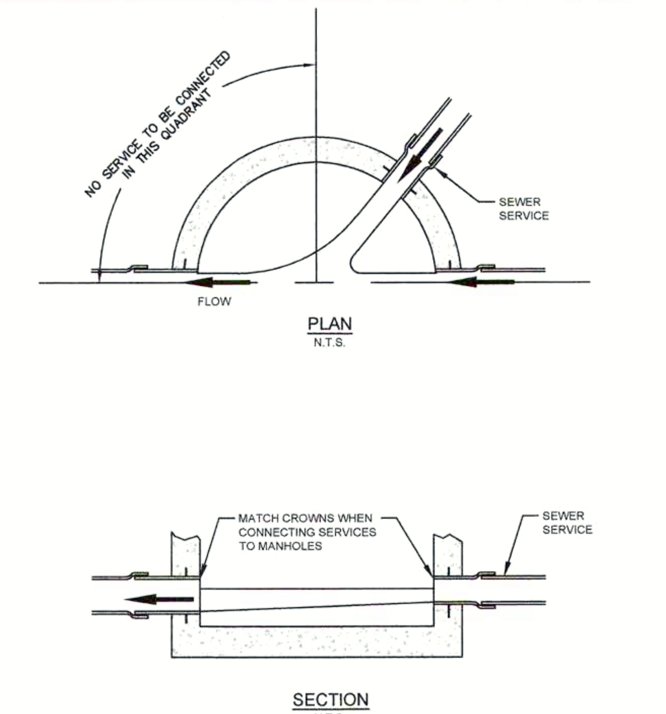

STANDARD DETAIL
Metropolitan Sewerage District
of Buncombe County, North Carolina
SERVICE CONNECTIONS AT MANHOLES
DATE APPROVED: MARCH 2017 | 2.11 - 07.1

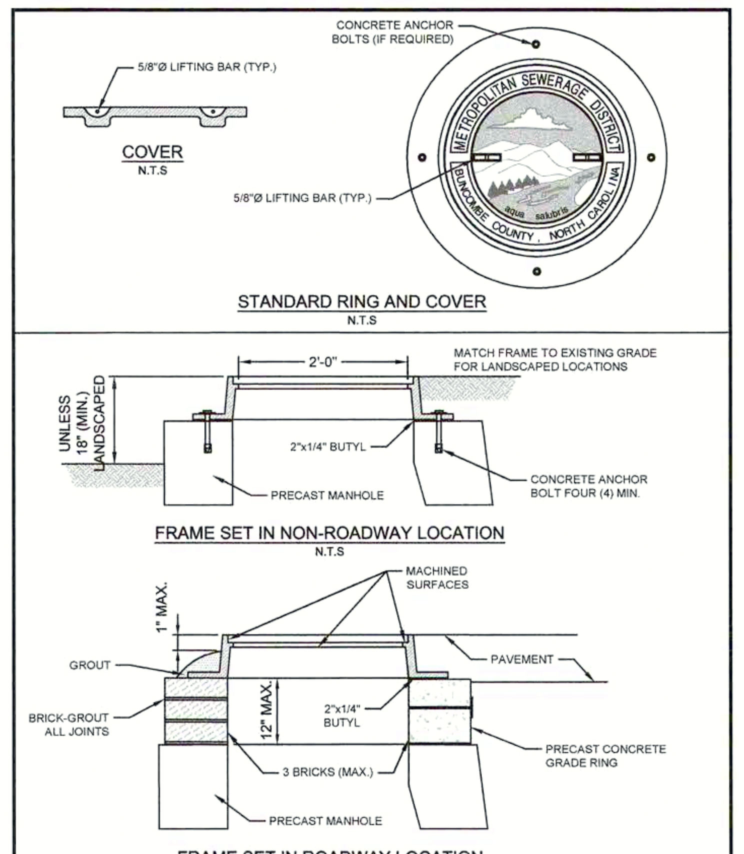

NOTE:

1. WHERE M.H. IS IN ROAD SHOULDER AND ROAD DOES NOT HAVE CURB AND GUTTER, DO NOT USE ANCHOR BOLTS IN FRAME.
2. "MSD OF BUNCOMBE COUNTY" TO APPEAR ON COVERS ONLY WHEN THE SEWER SYSTEM IS TO BE MAINTAINED BY MSD

STANDARD DETAIL
Metropolitan Sewerage District
of Buncombe County, North Carolina
STANDARD MANHOLE FRAME & COVER
DATE APPROVED: MARCH 2017 | 2.11 - 08.1

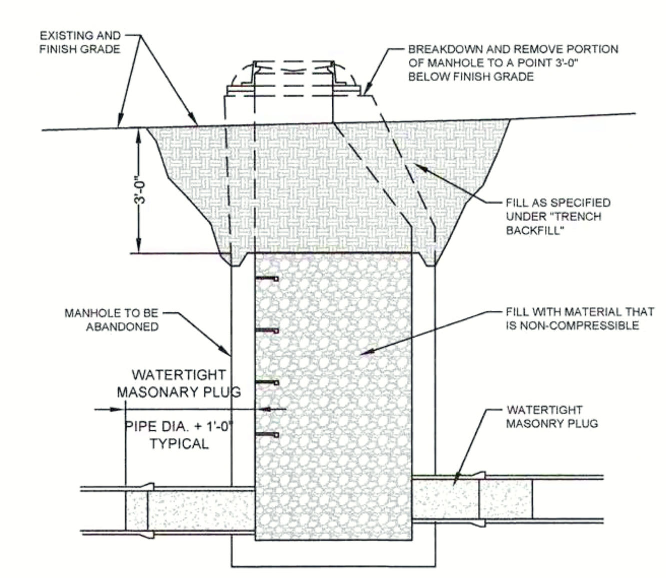

MANHOLE ABANDONMENT PROCEDURE
(SEE SECTION 2.21 OF SPECIFICATIONS FOR ADD'L INFORMATION)

MANHOLES WHICH ARE TO BE ABANDONED WILL FIRST HAVE BOTH INFLUENT AND EFFLUENT LINES PLUGGED INSIDE THE MANHOLE WITH WATERTIGHT MASONRY. THE MINIMUM LENGTH OF WATERTIGHT MASONRY PLUGS WILL BE THE DIAMETER OF THE ABANDONED PIPE PLUS ONE FOOT. THE MANHOLE WILL THEN BE FILLED WITH INCOMPRESSIBLE MATERIAL (CRUSHED STONE OR AS APPROVED), TO A POINT THREE FEET (3'-0") BELOW THE FINISH GRADE. THE REMAINDER OF THE MANHOLE SHALL BE BROKEN DOWN AND REMOVED. THEN THE EXCAVATION SHALL BE BACKFILLED TO FINISH GRADE AS SPECIFIED UNDER TRENCH BACKFILL.

STANDARD DETAIL
Metropolitan Sewerage District
of Buncombe County, North Carolina
MANHOLE ABANDONMENT
DATE APPROVED: MARCH 2017 | 2.21 - 01

Depths of Paving Courses for Pavement Repairs Requiring Binder

Classification	Base Course	Binder	Surface Course
Municipal Street*	8" ABC compacted to 100% standard proctor	4" Asphalt binder course Type 1 19.OC or S9.5B compacted to 92% maximum lab density	2" S9.5C compacted to 90% of maximum lab density
City of Asheville	8" ABC compacted to 100% standard proctor	6" Asphalt binder course Type 1 19.OC compacted to 92% maximum lab density	2" S9.5C compacted to 90% of maximum lab density
Biltmore Forest	8" ABC compacted to 100% standard proctor	4" Asphalt binder course Type 1 19.OC compacted to 92% maximum lab density	1" S9.5C compacted to 90% of maximum lab density
NCDOT Road (≥ 12" Dia. Pipe)	N/A	11" Asphalt binder course Type 1 19.OC compacted to 92% maximum lab density	2" S9.5C compacted to 90% of maximum lab density
NCDOT Road (< 12" Dia. Pipe)	8" ABC compacted to 95% standard proctor	6" Asphalt binder course Type 1 19.OC compacted to 92% maximum lab density (in two 3" lifts)	3" S9.5C compacted to 90% of maximum lab density (in two 1.5" lifts)
Heavy Duty Commercial Drive	8" ABC compacted to 100% standard proctor	4" Asphalt binder course Type 1 19.OC compacted to 92% maximum lab density	1.5" S9.5C compacted to 90% of maximum lab density

* Municipal streets include all streets that fall under the jurisdictions of Black Mountain, Montreat, Weaverville, and Woodfin.

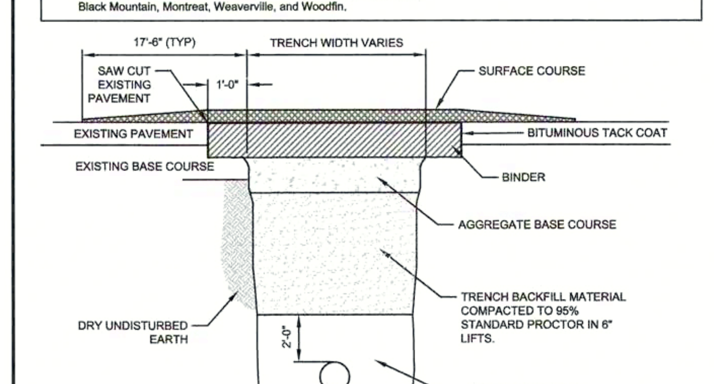

NOTES:

1. EDGES ARE TO BE SAWED WITH A CONCRETE SAW TO A NEAT SQUARED EDGE, AND BROOMED CLEAN OF DUST PRIOR TO APPLICATION OF TACK COAT.
2. EDGES AND OVERLAY AREAS TO BE TACKED WITH RC OR AC-1 SPECIAL TACK

REV: June 2020 KMK

STANDARD DETAIL
Metropolitan Sewerage District
of Buncombe County, North Carolina
TYPICAL PAVEMENT REPAIR
DATE APPROVED: MARCH 2017 | 4.08 - 01

Depths of Paving Courses for Pavement Repairs Not Requiring Binder

Classification	Base Course	Binder	Surface Course
Light Duty Commercial Drive	8" ABC compacted to 100% standard proctor	No binder needed	2" S9.5C compacted to 90% of maximum lab density
Residential Drive	8" ABC compacted to 100% standard proctor	No binder needed	2" S9.5C compacted to 90% of maximum lab density

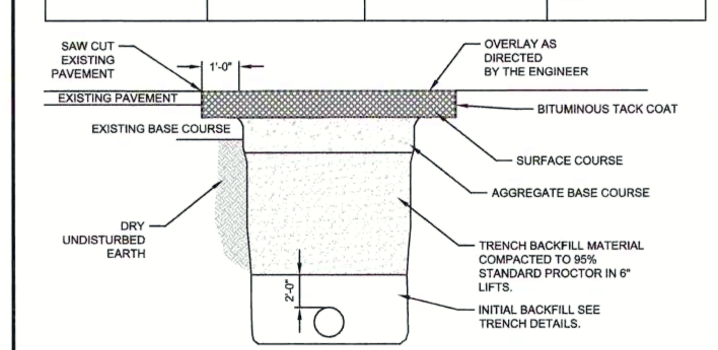

PRIVATE DRIVE AND PARKING LOT PAVEMENT REPAIR
(IN AREAS OF NON-HEAVY DUTY TRAFFIC)
N.T.S.

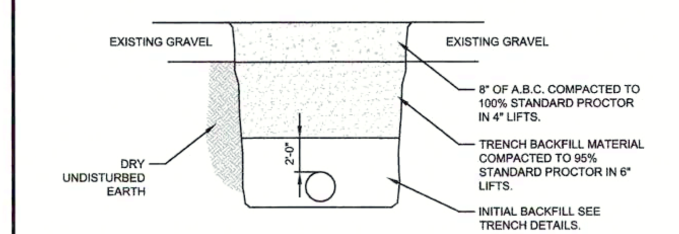

GRAVEL SURFACE REPAIR
N.T.S.

NOTES:

1. EDGES ARE TO BE SAW CUT WITH A CONCRETE SAW TO A NEAT SQUARED EDGE, AND BROOMED CLEAN OF DUST PRIOR TO APPLICATION OF TACK.
2. PAVEMENT REPAIR DETAIL SHALL BE USED FOR ALL BITUMINOUS SURFACES WHICH ARE NOT UNDER CONTROL OF THE N.C.D.O.T. OR BILTMORE FOREST.

REV: June 2020 KMK

STANDARD DETAIL
Metropolitan Sewerage District
of Buncombe County, North Carolina
PERMANENT PAVEMENT & GRAVEL SURFACE REPAIR
DATE APPROVED: MARCH 2017 | 4.08 - 02

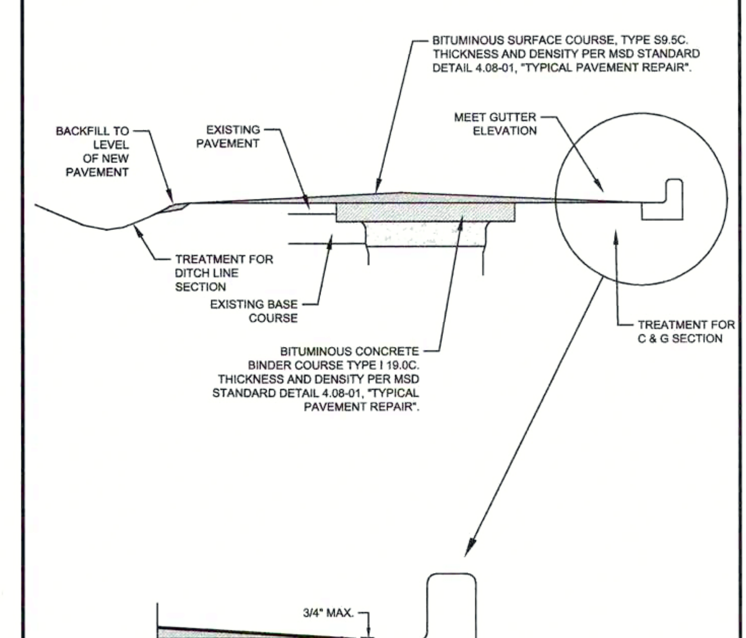

NOTES:

1. EDGES ARE TO BE SAWED WITH A CONCRETE SAW TO A NEAT SQUARED EDGE, AND BROOMED CLEAN OF DUST PRIOR TO APPLICATION OF TACK COAT.
2. CURB & GUTTER STREETS REQUIRE MILLING IN ACCORDANCE WITH LOCAL GOVERNMENT REQUIREMENTS.

REV: June 2020 KMK

STANDARD DETAIL
Metropolitan Sewerage District
of Buncombe County, North Carolina
FULL WIDTH OVERLAY DETAIL
DATE APPROVED: MARCH 2017 | 4.08 - 03

Metropolitan Sewerage District
of Buncombe County

Buchanan Ave.
Sanitary Sewer Details

DRAWN: JO
CHECKED BY: KMK
APPROVED: SKA
DATE: 06/27/2018
SCALE: NTS

D-1

NORTH CAROLINA PROFESSIONAL SEAL 37824 ENGINEER SHAUN K. ARMISTEAD
11/22/22

No.	DESCRIPTION	DATE
	REVISIONS	

MSD
Engineering Division

METROPOLITAN SEWERAGE DISTRICT • BUNCOMBE COUNTY, NORTH CAROLINA • aqua salubris

P:\COLLECTION SYSTEM\SYS_REHAB\GENERAL SEWER REHABILITATION\Buchanan Ave – 2014023\ENG\PLNS\BUCHANAN AVE REV 4–15–20.dwg 8/31/2023 7:16 AM JOGLE